Arbel Agencies LTD.
11 Ba'alei Hamelacha st. Qiryat Bialik P.O.B 1095, ZIP 2751311, ISRAEL
+972(0)48736969 +972(0)48730708 info@arbel-ltd.com www.arbel-ltd.com

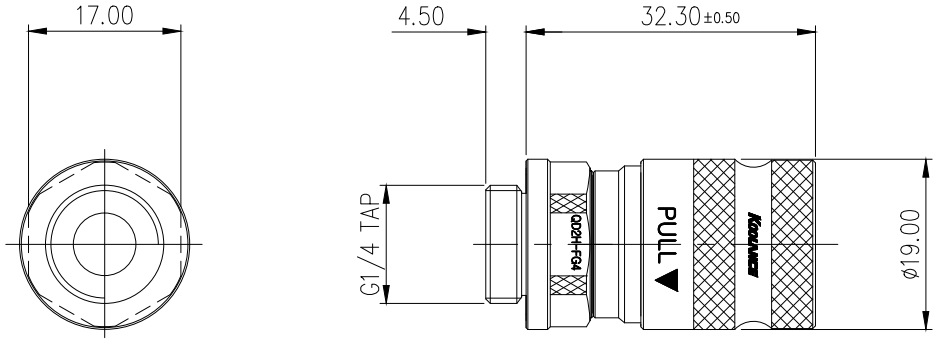

NO.	DESCRIPTION	MATER'L	QUANTITY	REMARKS
KOOLANCE		UNIT MM	PART NO. QD2H-FG4	
	BY / BY / BY / APPRD BY	SCALE N/S	TITLE DIMENSION	
DATE		3RD ANGLE		
	song	DWG. NO.	ITEM QD2H	

REV	DATE	CONTENTS	APPD BY

REVISION

File